Model Based Design:

Why you want it!

Why you hate it!

ACTION ENGINEERING

Jennifer Herron

Why You Want It… Why You Hate It…

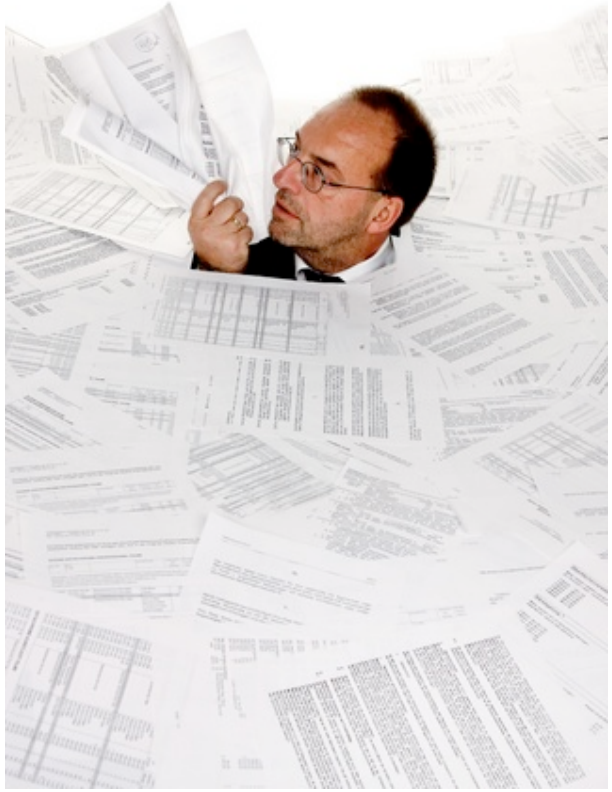

- Collaboration and Interoperability is FRUSTRATING!!
- MBD
  - Root of effective collaboration
  - Key to interoperability
- MBD is not well defined
- Goal
  - Facilitate discussion on MBD implementation strategies
  - Consolidate discussion results into a report characterizing the State of MBD in 2010

State of MBD in 2010

What Model Based Design (MBD) Means to ME

- Development approach that declares 3D CAD as the design authority
- Does not mean that 2D drawings are no longer used
- A technique that changes the mindset of the engineer to complete the design process and document it within the 3D CAD model.
- The design database is digitally captured and configuration managed with complete design intent.
- The practice of MBD lends itself more readily to a future in digital prototyping, direct digital manufacturing and 3D digital work instructions displayed on technology such as an iPad.

What do you See?

What do you See?

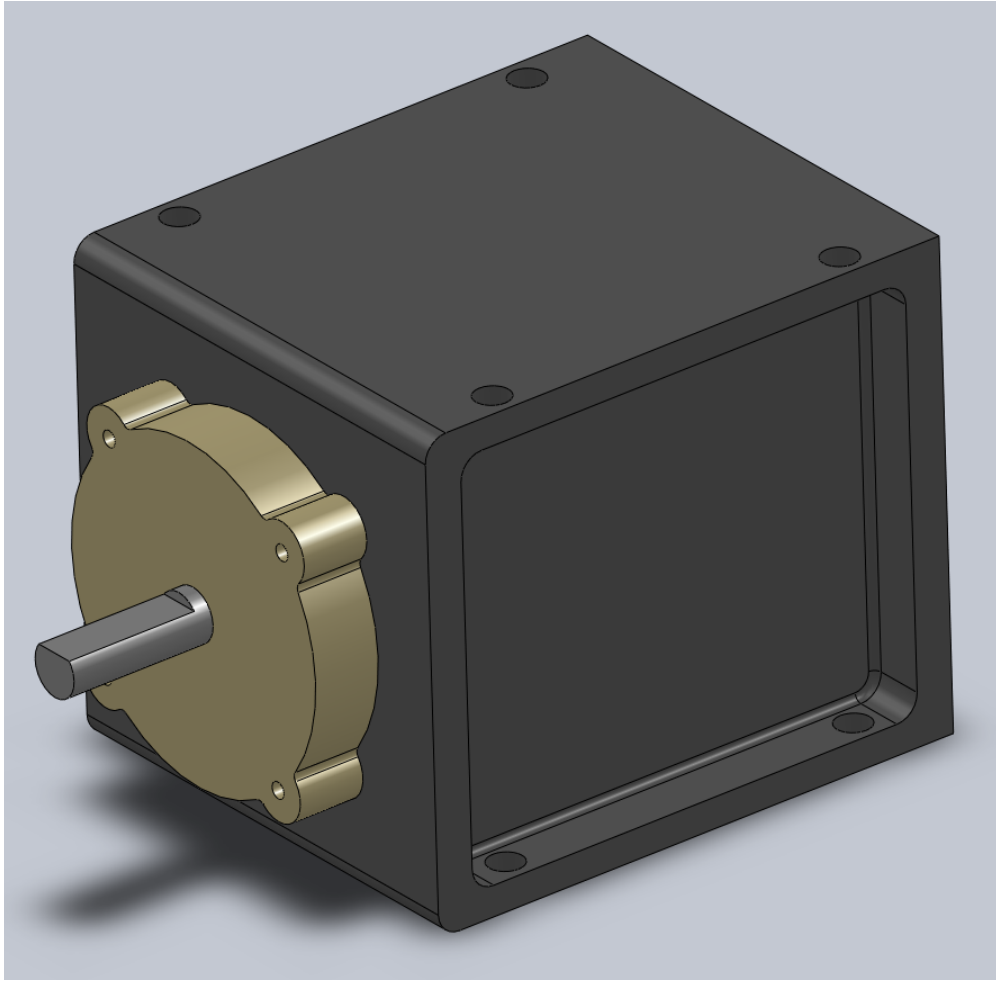

What do you See?

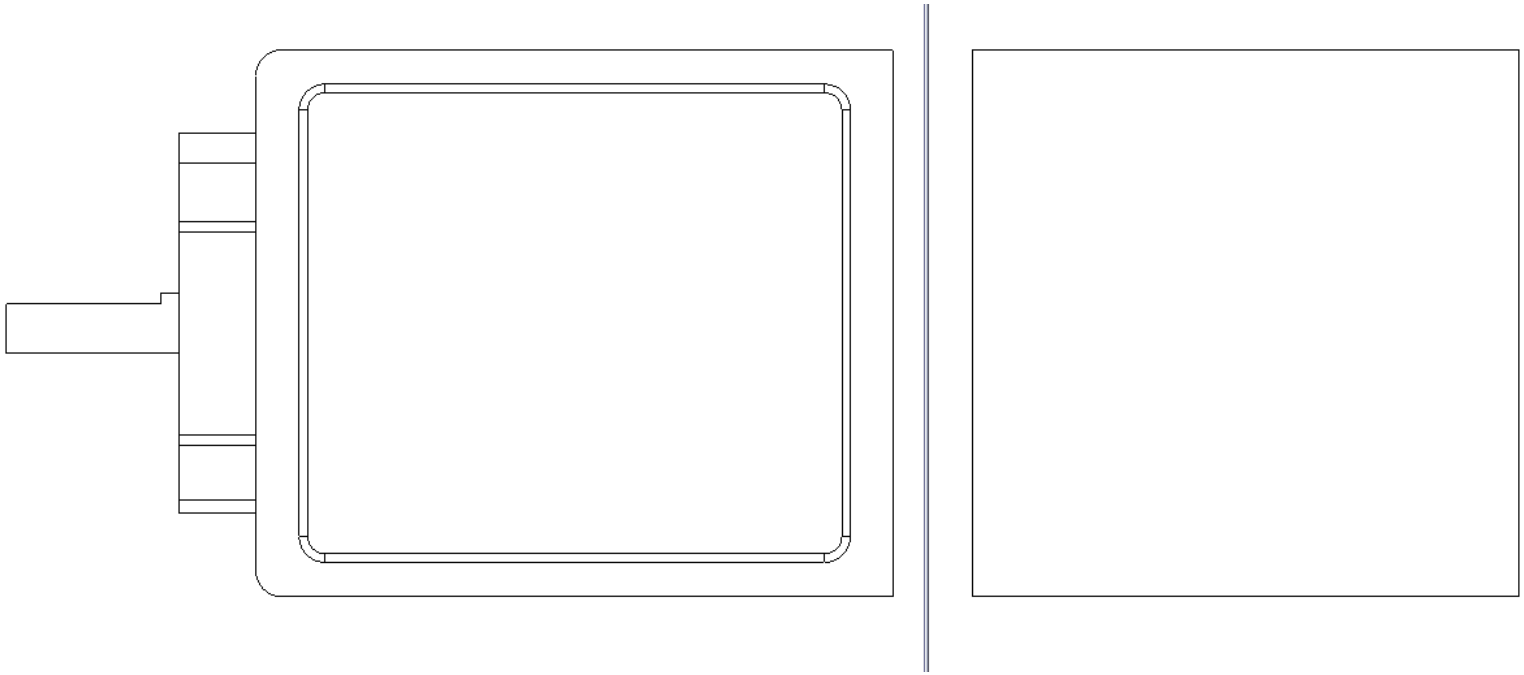

Brainstorm

- Prize
  - Every answer gets a ticket
  - Drawing at the end
- Ground Rules
  - Can't be all bad
- Keep answers short

Model Based Design

Advantages

- Can encapsulate the full definition of the product
- Closed loop design cycles
- Digital database facilitates rapid dissemination and sharing of the data
- Facilitates digital printing for prototype or manufacture
- No paper to store

Challenges

- Difficult to capture and store the non-geometric data
- Replacing drawings in volume manufacturing is harder than we think (not practical)
- 3D CAD is hard to share because it is poorly defined
- Hard to go to the model for detailed info
- Poorly Defined
- No-one knows how to do it
- Currently the model is not the master
- Are we going to be completely secure without paper?
- Interfacing with suppliers needs consideration (need rules in place)
- Must coordinate with customer standards

What Works?

Working

- PDM/PLM handles CAD check-in/ check-out and pushes updates
- Automotive has had some success at getting consensus – but this is mostly driven by requiring all to use the same software tools

Not Working

- Need to break down MBD into manageable topics which can be addressed individually
- Putting all data into the 3D CAD model is not the answer (CAD tool is an expensive text editor)
- Within product families there isn't enough consistency (blessing and a curse)
  - EXAMPLE: Parent/Child dependencies aren't stable enough in a large collaborative environment.
  - ProE: Publish geometry
  - SolidWorks: Layout
  - Is it that you don't know how to use it, or that the tools are inadequate?
- 3D Annotations are clunky
- Dictating that a certain industry or product line uses the same software is limiting and expensive

Survey

- Designing with 3D CAD? (lots of folks)
- Direct Manufacture for prototypes? Some use
- PDM/PLM? Heavy use
- ASME Y14.41 Digital Standard? The scope is the problem. There are more issues to address. Need better standards
- Missing process and methodology
- Does it save money? You spend a lot of money to save money. Once you get the process ironed out it is a big help. You save money when you have to go back and make changes
- Can it be implemented efficiently?
- Should there be training?
- Is training available?
- Is MBD stuck?

Prioritize

What are the top priority tasks or technologies to advance MBD?

1. Need set of goals for each company type (industry?)
2. Education, culture
3. Paradigm shift
4. Standards for communication
5. PLM/PDM not quite there yet
6. Validation process is paralyzed by changes
7. Communication patch with supplier, need confidence the supplier will be able to understand the model

Your Reward